FOOT PRESSURE BASED DOORBEL FOR PHYSICALLY CHALLENGED

A project submitted to the Bharathidasan University
in partial fulfillment of the requirements
for the award of the Degree of

BACHELOR OF COMPUTER APPLICATIONS

Submitted by

G.Kesava Priya
235113121

Under the guidance of

Dr. J . JAMES MANOHARAN, MCA,M.Phil,Ph.D.,

Director – BCA, Department of Computer Applications

DEPARTMENT OF COMPUTER APPLICATIONS

BISHOP HEBER COLLEGE (AUTONOMOUS)

"Nationally Reaccredited at A++ Grade with a CGPA of 3.69 out of 4 in NAAC IV Cycle"

Recognized by UGC as "College of Excellence"
Affiliated to Bharathidasan University

TIRUCHIRAPPALLI-620 017

NOVEMBER – 2025

DECLARATION

I hereby declare that the project work presented is originally done by me under the guidance of **Dr. J. James Manoharan , MCA., M.Phil., Ph.D., PGDCA., Director- BCA, Department of Computer Applications, Bishop Heber College (Autonomous), Tiruchirappalli-620 017** and has not been included in any other thesis/project submitted for any other degree.

Name of the Candidate	**:**	**G.KESAVA PRIYA**
Register Number	**:**	**235113121**
Batch	**:**	**2023-2026**

Signature of the Candidate

Dr. J. James Manoharan, MCA., M.Phil., Ph.D.,

Director – BCA, Department of Computer application,

UG Department of Computer Applications,

Bishop Heber College (Autonomous),

Tiruchirappalli – 620017

Date:

CERTIFICATE

This is to certify that the project work entitled **"Foot Pressure based Doorbell for Physically Challenged"** is a bonafide record work done by **G.KESAVA PRIYA Register Number: 235113121** in partial fulfillment of the requirements for the award of the degree of **BACHELOR OF COMPUTER APPLICATIONS** during the period **2023 - 2026.**

Place: **Signature of the Guide**

UG DEPARTMENT OF COMPUTER APPLICATIONS

BISHOP HEBER COLLEGE (AUTONOMOUS),

"Nationally Reaccredited at A^{++} Grade with a CGPA of 3.69 out of 4 in NAAC IV Cycle"

(Recognized by UGC as "College of Excellence")

(Affiliated to Bharathidasan University)

TIRUCHIRAPPALLI – 620 017

Date:

Course Title: Project **Course Code: U23CA5PJ**

CERTIFICATE

The Viva-Voce examination for the candidate **G.KESAVA PRIYA** **Register Number:235113121** was held on _____.

Signature of the Guide **Signature of the HOD**

Examiners:

1.

2.

ACKNOWLEDGEMENT

I take this opening to thank the people who have assisted me in this project work. I would like to express my first and foremost gratitude to the "Almighty," for the merciful shower of grace and blessing in all endeavor to bring the project to successful. Then my parents, who were pillars and front along of my each activity.

I wish to express my sincere thanks to **Dr. J. PRINCY MERLIN M.Sc., M.Phil., Ph.D.,** Principal, Bishop Heber College (Autonomous), Tiruchirappalli, who gave me the opportunity to do the course in this college.

I would like to express my sincere thanks and profound sense of gratitude to **Dr. J. JAMES MANOHARAN, MCA., M.Phil., Ph.D.,** Associate Dean - Training & Placement, Director – BCA, Department of Computer Applications, Bishop Heber College (Autonomous), Tiruchirappalli, who gave valuable guidance and excellent suggestions in improving the quality of the project. I would like to thank all the staff members of the Department of Computer Applications, who put their effort into shape me.

I will be failing in my duty if I don’t thank my friends, who stood with me in each and every activity as a great wall by extending their excellent support.

Finally, I would like to thank everybody who was important to the successful realization of my project, as well as expressing my apology that I could not mention personally one by one.

G.KESAVA PRIYA
(235113123)

Table of Contents

S.No.	Title	Page No.
	Abstract	
1.	Introduction 1.1 Existing System 1.2 Proposed System	
2.	Logical Development 2.1 Data Flow Diagram 2.2 Architectural Design	
3.	System Requirements 3.1 Software Requirements 3.2 Hardware Requirements	
4.	Review of Literature	
5.	Program Design	
6.	Testing & Implementation	
7.	Conclusion & Future Enhancement	
8.	References	
9.	Appendix	
10.	Kit Image	
11.	Paper Publication	

ABSTRACT

Inclusive technology plays a crucial role in modern design, particularly in improving accessibility for physically challenged individuals. Traditional hand-operated doorbells often pose challenges for people with limited mobility or dexterity, restricting independence and convenience. This paper proposes a foot pressure-based doorbell system that replaces conventional push-button mechanisms with a pressure-sensitive mat, enabling users to operate the doorbell with a simple foot press. The system utilizes a microcontroller to process the sensor input and activate a relay-driven alert system, such as a buzzer or light indicator. A threshold-based detection mechanism distinguishes intentional presses from accidental contact, minimizing false activations and ensuring reliable operation. The system is designed with low-cost, readily available components, focusing on simplicity, affordability, and durability. It can be effectively implemented in residential settings, hospitals, rehabilitation centers, and care facilities where accessibility is critical. Experimental testing under varied conditions, including different footwear and foot pressures, demonstrated consistent performance, fast response time, and high reliability. Beyond its technical functionality, the system provides significant social benefits by enhancing user independence, reducing reliance on caregivers, and improving the quality of life for physically challenged individuals. Compared to smartphone-based or voice-activated doorbells, this foot-operated approach is intuitive, cost-effective, and user-friendly, making it a practical solution for inclusive living environments. This work emphasizes the importance of designing assistive technologies that integrate seamlessly into daily life while addressing real-world accessibility challenges.

Keywords—Assistive technology, Foot pressure sensor, Accessibility, Inclusive design, Microcontroller-based system, physically challenged, Smart doorbell.

INTRODUCTION

1. INTRODUCTION

1.1 INTRODUCTION

Accessibility and inclusivity have become essential aspects of modern design, especially in the context of assistive technologies for physically challenged individuals. Daily activities that are often taken for granted, such as operating a doorbell, can present significant challenges for people with limited mobility, dexterity, or strength. Traditional doorbells rely on hand-operated push buttons, which can be difficult or impossible for some individuals to use independently. This lack of accessibility can compromise personal autonomy, increase dependence on caregivers, and reduce overall quality of life. To address these challenges, there is a growing need for simple, reliable, and cost-effective solutions that make technology more inclusive.

In this work, we propose a foot pressure-based doorbell system as an alternative to conventional push-button mechanisms. The system integrates a pressure-sensitive mat, microcontroller, and relay-operated alert mechanism to detect foot pressure and activate a doorbell signal. By using the foot instead of the hand, users with limited upper-body mobility can operate the doorbell independently. The system also includes a threshold-based detection algorithm that differentiates intentional user input from accidental contact, minimizing false triggers and ensuring dependable performance. The proposed solution emphasizes affordability, simplicity, and reliability, making it suitable for residential homes, hospitals, rehabilitation centers, and care facilities. It avoids the complexity and higher cost associated with smartphone-based or voice-activated doorbells, while offering a user-friendly and intuitive interface. Beyond technical functionality, the system addresses social aspects by promoting independence, reducing caregiver dependence, and enhancing the day-to-day usability of assistive technology. Through this approach, the work demonstrates a practical application of inclusive design principles, highlighting the importance of integrating accessibility into everyday devices and bridging the gap between assistive technology and real-life usability.

1.2 EXISTING SYSTEM

Traditional doorbell systems typically rely on hand-operated push buttons to trigger an alert, either through a mechanical chime or an electronic buzzer. While these systems are

simple and widely used, they present accessibility challenges for individuals with physical disabilities, such as limited hand mobility, arthritis, or muscle weakness. Users who cannot exert sufficient force or accurately press a small button may struggle to activate the doorbell, which reduces their independence and increases reliance on caregivers. Additionally, conventional systems lack any form of intelligent input validation, making them prone to accidental activation or failure under conditions such as wet hands or misaligned presses.

Some modern alternatives have attempted to address these limitations. Voice-activated doorbells allow users to ring the bell using speech commands; however, these systems require reliable voice recognition, a stable power supply, and can be expensive to implement. Environmental noise, speech impediments, or device complexity can also limit their effectiveness. Smartphone-controlled doorbells provide remote access and enhanced functionality, such as video monitoring and notification alerts, but they depend on a user having a compatible mobile device, sufficient network connectivity, and the technical knowledge to operate the app. Such requirements may not be feasible for all physically challenged individuals, particularly the elderly or those with cognitive difficulties. Pressure-activated or motion-sensing systems exist in certain commercial applications, but most are not specifically designed to meet the unique needs of users with physical impairments. They often fail to differentiate between intentional and accidental input, which reduces reliability in real-world usage. Overall, existing doorbell systems, while functional, fail to provide a cost-effective, intuitive, and universally accessible solution for physically challenged users. This highlights the need for a simple, affordable, and reliable system that can be operated easily without hand use, ensuring independence, usability, and inclusion in daily living activities. The proposed foot pressure-based system addresses these gaps by combining simplicity, affordability, and user-centered design principles.

1.3 PROPOSED SYSTEM

The proposed system introduces a foot pressure-based doorbell specifically designed for physically challenged individuals, providing an accessible, intuitive, and reliable alternative to conventional hand-operated push buttons. The core components of the system include a pressure-sensitive mat, a microcontroller, a relay module, and an alert mechanism such as a buzzer or LED indicator. The pressure mat is placed near the entrance, allowing users to operate the doorbell by simply stepping on it with their foot. This design eliminates the need for fine motor skills or hand mobility, enabling greater independence for users.

When a user applies pressure to the mat, the sensor detects the force and sends an electrical signal to the microcontroller. The microcontroller processes the input using a threshold-based detection algorithm, which distinguishes between intentional presses and accidental contacts. This ensures that the system responds only to deliberate user actions, thereby minimizing false triggers. Upon validation, the microcontroller activates a relay, which in turn powers the alert mechanism to notify the household or facility of a visitor.

The system emphasizes low-cost, widely available components such as resistive or piezoelectric pressure sensors, Arduino or ESP32 microcontrollers, and standard relay modules. Its design is compact, easy to install, and adaptable to various environments including homes, hospitals, and rehabilitation centers. The prototype has been tested under different operating conditions, including variations in foot pressure, footwear types, and surface placement, showing consistent performance and reliability. In addition to technical functionality, the system addresses social and usability aspects by promoting independence, reducing caregiver dependency, and improving the quality of life for physically challenged individuals. By integrating a simple, intuitive, and inclusive design, the foot pressure-based doorbell demonstrates a practical solution that bridges the gap between accessibility and everyday usability. This approach provides a significant improvement over existing doorbell systems, combining affordability, reliability, and ease of use in a single assistive technology solution.

LOGICAL DEVELOPMENT

2. LOGICAL DEVELOPMENT

2.1 DATA FLOW DIAGRAM

2.1.1 LEVEL 0

The Level 0 DFD shows how the system is divided into 'sub-systems' (processes), each of which deals with one or more of the data flows to or from an external agent, and which together provide all of the functionality of the system as a whole. It also identifies internal data stores that must be present in order for the system to do its job, and shows the flow of data between the various parts of the system.

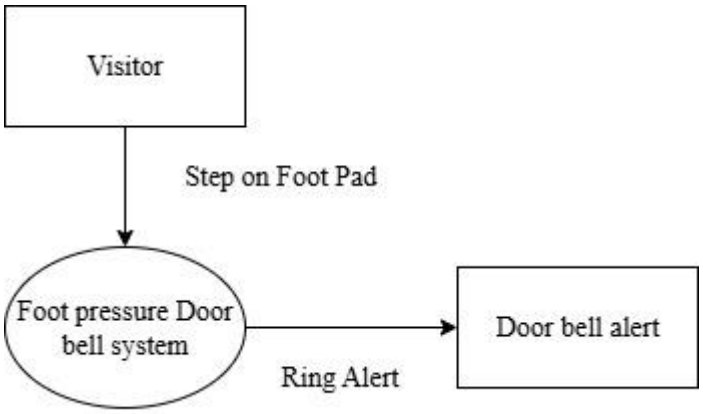

Fig.2.1 Data flow Diagram Level 0

2.1.2 LEVEL 2

The next stage is to create the Level 2 Data Flow Diagram. This highlights the main functions carried out by the system. As a rule, to describe the system was using between two and seven functions - two being a simple system and seven being a complicated system. This enables us to keep the model manageable on screen or paper.

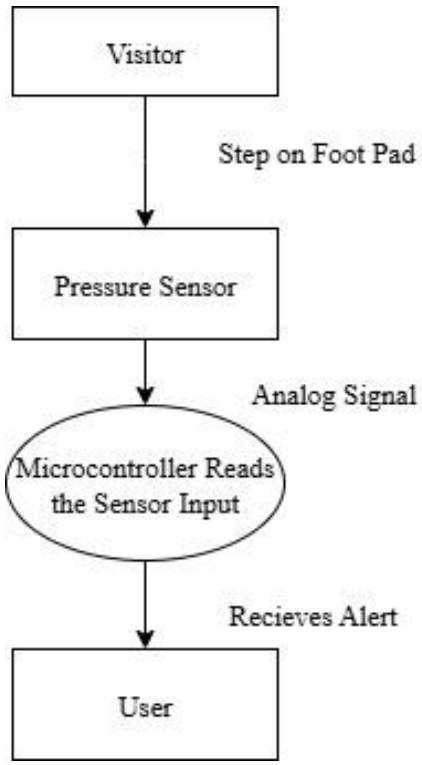

Fig.2.2 Data flow Diagram level 1

2.2 ARCHITECTURE DESIGN

2.2.1 Software Block Diagram

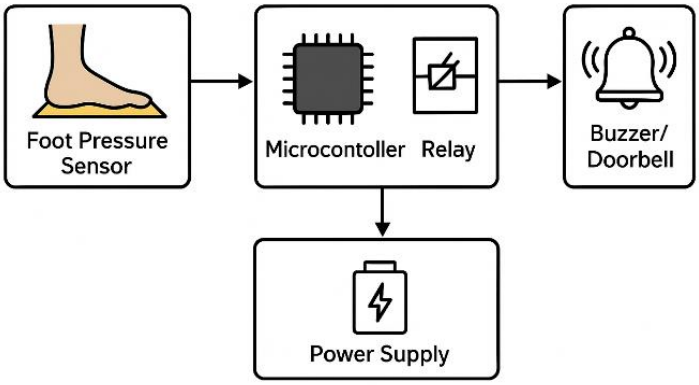

Fig.2.3 Proposed Architecture Diagram

EXPLAINATION:

The proposed architecture of the foot pressure-based doorbell system is designed for simplicity, reliability, and accessibility. It consists of four main components: a pressure-sensitive mat, microcontroller, relay module, and alert mechanism. The pressure mat, placed near the entrance, detects foot pressure and converts it into an electrical signal. This signal is transmitted to the microcontroller, which serves as the central processing unit.

The microcontroller continuously monitors the sensor input and applies a threshold-based detection algorithm to differentiate intentional foot presses from accidental contacts. When the applied pressure exceeds the predefined threshold, the microcontroller triggers a relay module, which in turn activates the alert mechanism, such as a buzzer or LED indicator, to notify the presence of a visitor. The system's architecture emphasizes modularity and scalability, allowing components to be easily replaced or upgraded without major redesign. It uses low-cost, widely available components, ensuring affordability and ease of implementation in homes, hospitals, or rehabilitation centers. The foot-operated design ensures that the system is inclusive and user-friendly, particularly for physically challenged individuals who may have limited hand mobility. By integrating real-time detection, signal processing, and alert activation into a compact framework, the proposed architecture bridges the gap between accessibility and practical usability in everyday living.

2.2.2 Hardware Block Diagram

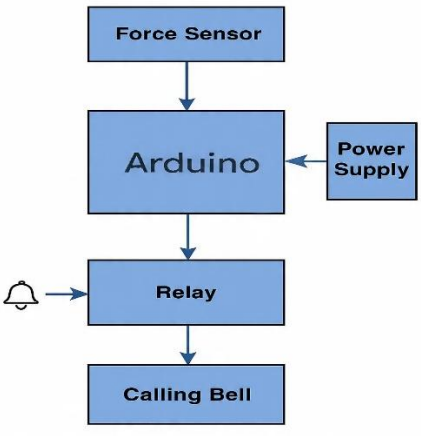

Fig.2.4 Proposed hardware Block Diagram

EXPLANATION:

The hardware architecture of the foot pressure-based doorbell system comprises four primary components: the pressure-sensitive mat, microcontroller unit (MCU), relay module, and alert mechanism. The pressure mat functions as the input interface, detecting foot pressure applied by the user. It converts mechanical force into an electrical signal, which is then sent to the microcontroller for processing. The microcontroller serves as the central processing unit and is responsible for interpreting sensor signals. It applies a threshold-based algorithm to distinguish between intentional foot presses and accidental contact, ensuring accurate and reliable activation of the doorbell. Upon detecting a valid input, the microcontroller sends a control signal to the relay module.

The relay module acts as an interface between the low-power microcontroller and the high-power alert mechanism. Once energized, it powers the alert system, which can be a buzzer, LED indicator, or combination of both, notifying the presence of a visitor. The hardware block diagram is designed for simplicity, affordability, and modularity, allowing each component to be easily replaced or upgraded. By integrating the input detection, signal processing, and output activation in a compact system, the design ensures ease of installation and accessibility, making it particularly suitable for physically challenged individuals. This arrangement provides a practical, cost-effective, and user-friendly solution for inclusive doorbell operation.

2.2.3 CIRCUIT DIAGRAM

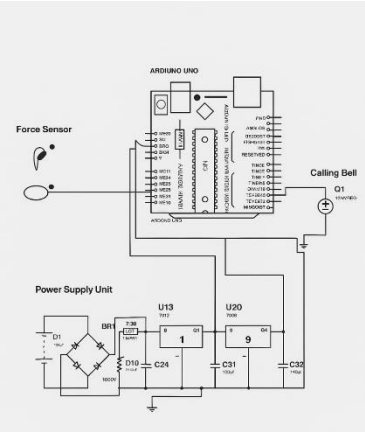

Fig. 2.5 Circuit Diagram

EXPLAINTION:

The circuit of the foot pressure-based doorbell system is designed for simplicity, reliability, and cost-effectiveness. The main components include a pressure-sensitive mat, microcontroller (such as Arduino or ESP32), relay module, and alert mechanism (buzzer or LED). The pressure mat acts as a variable resistor or piezoelectric sensor, producing an electrical signal proportional to the applied foot pressure. This signal is connected to an analog input pin of the microcontroller.

Inside the microcontroller, the signal is continuously monitored and compared with a predefined threshold value. If the applied pressure exceeds the threshold, indicating an intentional foot press, the microcontroller sends a digital output signal to the relay module. The relay functions as a switch that safely interfaces the low-voltage microcontroller with the higher-voltage alert mechanism. Once the relay is activated, the buzzer or LED receives power and notifies the presence of a visitor. The circuit also includes debouncing logic within the microcontroller to prevent false triggering due to vibrations or brief pressure fluctuations. Power to the system is supplied via a standard DC power source, which can be regulated to suit the microcontroller and relay module requirements. The overall design emphasizes modularity and easy assembly, making it accessible for installation in homes, hospitals, and rehabilitation centers. This ensures that physically challenged individuals can operate the doorbell with ease, reliability, and minimal maintenance.

SYSTEM REQUIRMENTS

3. SYSTEM REQUIREMENTS

3.1 SOFTWARE REQUIREMENTS

3.1.1 ARDUINO IDE

The **Arduino IDE** is a cross-platform application (Windows, macOS, Linux) written in Java, released under the GNU GPL v2. It supports **C and C++** with simplified structuring rules and includes libraries from the **Wiring project** for common I/O operations. User programs, called **sketches**, require only two basic functions (setup and loop), which are compiled and uploaded to the Arduino board via the built-in loader.

The IDE is **minimalistic yet complete**, consisting of:

- **Menu bar** (File, Edit, Sketch, Tools, Help)
- **Text editor** for writing code (.ino files)
- **Output/console window** showing errors, memory use, and messages
- **Toolbar** for verifying, uploading, and opening the Serial Monitor

Arduino boards read inputs (e.g., sensor, button, message) and produce outputs (e.g., motor, LED, online actions). While many users call it the "Arduino language," the platform actually uses **C++ with Arduino-specific libraries** for tasks like pin control and analog reading.

LIBRARIES

Libraries provide extra functionality for use in sketches, e.g. working with hardware or manipulating data. To use a library in a sketch, select it from the **Sketch > Import Library** menu. This will insert one or more **#include** statements at the top of the sketch and compile the library with your sketch. Because libraries are uploaded to the board with your sketch, they increase the amount of space it takes up. If a sketch no longer needs a library, simply delete its **#include** statements from the top of your code. There is a list of libraries in the reference. Some libraries are included with the Arduino software. Others can be downloaded from a variety of sources or through the Library Manager. Starting with version 1.0.5 of the IDE, you do can import a library from a zip file and use it in an open sketch.

CONNECTING THE ARDUINO

Connecting an Arduino board to your PC is quite simple. On Windows:

1. Plug in the USB cable - one end to the PC, and one end to the Arduino board.

2. When prompted, select "Browse my computer for driver" and then select the folder to which you extracted your original Arduino IDE download.

3. You may receive an error that the board is not a Microsoft certified device - select “Install anyway.”

4. Your bord should now be ready for programming.

When programming your Arduino board it is important to know what COM port the Arduino is using on your PC. On Windows, navigate to Start->Devices and Printers, and look for the Arduino. The COM port will be displayed underneath. Alternatively, the message telling you that the Arduino has been connected successfully in the lower-left hand corner of your screen usually specifies the COM port is it using.

PREPARING THE BOARD

Before loading any code to your Arduino board, you must first open the IDE. Double click the Arduino .exe file that you downloaded earlier. A blank program, or "sketch," should open. The Blink example is the easiest way to test any Arduino board. Within the Arduino window, it can be found under `File->Examples->Basics->Blink`.

Before the code can be uploaded to your board, two important steps are required.

1. Select your Arduino from the list under `Tools->Board`. The standard board used in RBE 1001, 2001, and 2002 is the Arduino Mega 2560, so select the "Arduino Mega 2560 or Mega ADK" option in the dropdown.

2. Select the communication port, or COM port, by going to `Tools->Serial Port`.

If you noted the COM port your Arduino board is using, it should be listed in the dropdown menu. If not, your board has not finished installing or needs to be reconnected.

LOADING CODE

The upper left of the Arduino window has two buttons: A checkmark to Verify your code, and a right-facing arrow to upload it. Press the right arrow button to compile and upload the Blink example to your Arduino board. The black bar at the bottom of the Arduino window is reserved for messages indicating the success or failure of code uploading. A "Completed Successfully" message should appear once the code is done uploading to your board. If an error message appears instead, check that you selected the correct board and COM port in the Tools menu, and check your physical connections. If uploaded successfully, the LED on your board should blink on/off once every second. Most Arduino boards have an LED prewired to pin 13.

It is very important that you do not use pins 0 or 1 while loading code. It is recommended that you do not use those pins ever. Arduino code is loaded over a serial port to the controller. Older models use an FTDI chip which deals with all the USB specifics. Newer models have either a small AVR that mimics the FTDI chip or a built-in USB-to-serial port on the AVR micro-controller itself.

3.1.2 Proteus

The Proteus Design Suite is a proprietary software tool suite used primarily for electronic design automation. The software is used mainly by electronic design engineers and technicians to create schematics and electronic prints for manufacturing printed circuit boards. Proteus is design software developed by Lab center Electronics for electronic circuit simulation, schematic capture and PCB design. Its simplicity and user friendly design made it popular among electronics hobbyists. Proteus is commonly used for digital simulations such as microcontrollers and microprocessors. It can simulate LED, LDR, USB Communication. Proteus is a simulation and design software tool developed by Lab center Electronics for Electrical and Electronic circuit design. It also possess 2D CAD drawing feature. It deserves to bear the tagline “From concept to completion”.

About Proteus

- It is a software suite containing schematic, simulation as well as PCB designing.
- ISIS is the software used to draw schematics and simulate the circuits in real time. The simulation allows human access during run time, thus providing real time simulation.
- ARES is used for PCB designing. It has the feature of viewing output in 3D view of the designed PCB along with components.

- The designer can also develop 2D drawings for the product.

Features

ISIS has wide range of components in its library. It has sources, signal generators, measurement and analysis tools like oscilloscope, voltmeter, ammeter etc., probes for real time monitoring of the parameters of the circuit, switches, displays, loads like motors and lamps, discrete components like resistors, capacitors, inductors, transformers, digital and analog Integrated circuits, semi-conductor switches, relays, microcontrollers, processors, sensors etc.

HISTORY

The first version of what is now the Proteus Design Suite was called PC-B and was written by the company chairman, John Jameson, for DOS in 1988. Schematic Capture support followed in 1990, with a port to the Windows environment shortly thereafter. Mixed mode SPICE Simulation was first integrated into Proteus in 1996 and microcontroller simulation then arrived in Proteus in 1998. Shape based auto routing was added in 2002 and 2006 saw another major product update with 3D Board Visualization. More recently, a dedicated IDE for simulation was added in 2011 and MCAD import/export was included in 2015. Support for high speed design was added in 2017. Feature led product releases are typically biannual, while maintenance based service packs are released as required.

PRODUCT MODULES

The Proteus Design Suite is a Windows application for schematic capture, simulation, and PCB (Printed Circuit Board) layout design. It can be purchased in many configurations, depending on the size of designs being produced and the requirements for microcontroller simulation. All PCB Design products include an auto-router and basic mixed mode SPICE simulation capabilities.

Schematic Capture

Schematic capture in the Proteus Design Suite is used for both the simulation of designs and as the design phase of a PCB layout project. It is therefore a core component and is included with all product configurations.

Microcontroller Simulation

The micro-controller simulation in Proteus works by applying either a hex file or a debug file to the microcontroller part on the schematic. It is then co-simulated along with any analog and digital electronics connected to it. This enables its use in a broad spectrum of project prototyping in areas such as motor control, GYRO SENSOR control and user interface design. It also finds use in the general hobbyist community and, since no hardware is required, is convenient to use as a training or teaching tool. Support is available for co-simulation of:

- Microchip Technologies PIC10, PIC12, PIC16, PIC18, PIC24, dsPIC33 Microcontrollers.
- Atmel AVR (and Arduino), 8051 and ARM Cortex-M3 Microcontrollers
- NXP 8051, ARM7, ARM Cortex-M0 and ARM Cortex-M3 Microcontrollers.
- Texas Instruments MSP430, PICCOLO DSP and ARM Cortex-M3 Microcontrollers.
- Parallax Basic Stamp, Free scale HC11, 8086 Microcontrollers.

PCB Design

The PCB Layout module is automatically given connectivity information in the form of a net list from the schematic capture module. It applies this information, together with the user specified design rules and various design automation tools, to assist with error free board design. PCB's of up to 16 copper layers can be produced with design size limited by product configuration.

3D Verification

The 3D Viewer module allows the board under development to be viewed in 3D together with a semi-transparent height plane that represents the board’s enclosure. STEP output can then be used to transfer to mechanical CAD software such as Solid works or Autodesk for accurate mounting and positioning of the board.

PROTEUS SIMULATIONS

Proteus's simulation feature. Many of the components in Proteus can be simulated. There are two options for simulating: Run simulator and advance frame by frame. The "Run simulator" option simulates the circuit in a normal speed (If the circuit is not heavy). "Advance frame by frame" option advances to next frame and waits till you click this button for the next time. This can be useful for debugging digital circuits.
You can also simulate microcontrollers. The microcontrollers which can be simulated include PIC24, dsPIC33, 8051, Arduino, ARM7 based microcontrollers. You can download the compilers for Proteus or use different compiler and dump the hex files in the microcontroller

in Proteus. You can even interact in real-time with the simulation using switches, resistors, LDRs, etc. There are even virtual voltmeter, ammeter, oscilloscope, logic analyser, etc.

Advantages of Proteus ISIS Professional:-

1. It gives the proper idea and implementation of your code and circuit before implementing on hardware.

2. It reduces the time on creating hardware and testing your errors directly on hardware. You can analyses your circuit and code both on Proteus and find the errors encountering before implementing on hardware.

3. Reduces project cost and software dependency.

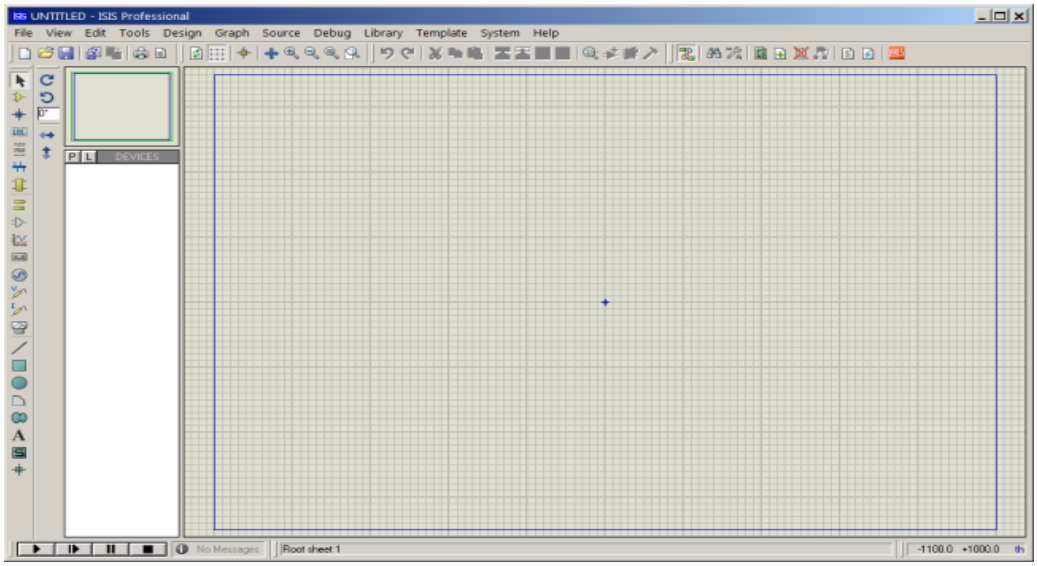

Fig.3.1 Design nterface Screenshot

ARDUINO IOT CLOUD

Fig.3.2 Arduino IOT Cloud

Arduino IoT Cloud is a platform for creating, managing, and deploying Internet of Things (IoT) projects. It integrates seamlessly with Arduino boards and compatible hardware, allowing users to collect sensor data, control devices, and monitor them remotely.

Its user-friendly, no-code/low-code interface makes it accessible to beginners while still powerful for advanced developers. Users can program devices directly from the cloud, use the Web Editor for coding, and build interactive dashboards with widgets like buttons, sliders, and graphs.

Key features include:

- Real-time data monitoring and visualization
- Secure communication with device authentication and encryption
- Integrations with Alexa, Google Assistant, and APIs
- Automation rules for smart actions (e.g., alerts, triggers)
- Mobile access for remote monitoring and control
- Scalability from simple projects to large IoT systems

3.2 HARDWARE REQUIREMENTS

3.2.1 ARDUINO UNO

The **Arduino UNO** is an open-source microcontroller board based on the **ATmega328P**. It has **14 digital I/O pins, 6 analog inputs**, and is programmable via the **Arduino IDE** using a USB type-B cable. It can be powered through USB or an external supply (7–20V). The board's design is open-source under the **CC BY-SA 2.5 license**. "Uno" (Italian for one) marked the release of Arduino IDE 1.0 and became the **reference model** for the Arduino platform.

The **ATmega328** comes preloaded with a **bootloader** for uploading code without external programmers. Unlike earlier boards using FTDI chips, the Uno uses an **ATmega16U2/8U2** as a USB-to-serial converter.

The Arduino project began in 2003 at **IDII, Italy**, inspired by the expensive BASIC Stamp boards. Hernando Barragán's **Wiring platform** laid the foundation, later expanded by **Massimo Banzi, David Mellis, and David Cuartielles**, who forked it into Arduino. The Uno became the most popular and widely used board in the Arduino family.

SPECIFICATION

1. Microcontroller: Microchip ATmega328P
2. Operating Voltage: 5 Volt
3. Input Voltage: 7 to 20 Volts
4. Digital I/O Pins: 14 (of which 6 provide PWM output)
5. Analog Input Pins: 6
6. DC Current per I/O Pin: 20 mA
7. DC Current for 3.3V Pin: 50 mA
8. Flash Memory: 32 KB of which 0.5 KB used by boot loader
9. SRAM: 2 KB
10. EEPROM: 1 KB
11. Clock Speed: 16 MHz
12. Length: 68.6 mm
13. Width: 53.4 mm
14. Weight: 25 g

COMMUNICATION

The Arduino/Genuino Uno has a number of facilities for communicating with a computer, another Arduino/Genuino board, or other microcontrollers. The ATmega328 provides UART TTL (5V) serial communication, which is available on digital pins 0 (RX) and 1 (TX). An ATmega16U2 on the board channels this serial communication over USB and appears as a virtual com port to software on the computer. The 16U2 firmware uses the standard USB COM drivers, and no external driver is needed. However, on Windows, a .inf file is required. The Arduino Software (IDE) includes a serial monitor which allows simple textual data to be sent to and from the board. The RX and TX LEDs on the board will flash when data is being transmitted via the USB-to-serial chip and USB connection to the computer (but not for serial communication on pins 0 and 1). A Software Serial library allows serial communication on any of the Uno's digital pins

PINS General Pin functions

- LED: There is a built-in LED driven by digital pin 13. When the pin is HIGH value, the LED is on, when the pin is LOW, it's off.

- VIN: The input voltage to the Arduino/Genuino board when it's using an external power source (as opposed to 5 volts from the USB connection or other regulated power source). You can supply voltage through this pin, or, if supplying voltage via the power jack, access it through this pin.
- 5V: This pin outputs a regulated 5V from the regulator on the board. The board can be supplied with power either from the DC power jack (7 - 20V), the USB connector (5V), or the VIN pin of the board (7-20V). Supplying voltage via the 5V or 3.3V pins bypasses the regulator, and can damage the board.
- 3V3: A 3.3 volt supply generated by the on-board regulator. Maximum current draw is 50 mA.
- GND: Ground pins.
- IOREF: This pin on the Arduino/Genuino board provides the voltage reference with which the microcontroller operates. A properly configured shield can read the IOREF pin voltage and select the appropriate power source or enable voltage translators on the outputs to work with the 5V or 3.3V.
- Reset: Typically used to add a reset button to shields which block the one on the board.

Special Pin Functions

Each of the 14 digital pins and 6 Analog pins on the Uno can be used as an input or output, using pinMode (), digitalWrite(), and digitalRead() functions. They operate at 5 volts. Each pin can provide or receive 20 mA as recommended operating condition and has an internal pull-up resistor (disconnected by default) of 20-50k ohm. A maximum of 40mA is the value that must not be exceeded on any I/O pin to avoid permanent damage to the microcontroller. The Uno has 6 analog inputs, labeled A0 through A5, each of which provide 10 bits of resolution (i.e. 1024 different values). By default they measure from ground to 5 volts, though is it possible to change the upper end of their range using the AREF pin and the analogReference() function.

In addition, some pins have specialized functions:

- Serial / UART: pins 0 (RX) and 1 (TX). Used to receive (RX) and transmit (TX) TTL serial data. These pins are connected to the corresponding pins of the ATmega8U2 USB-to-TTL Serial chip.
- External Interrupts: pins 2 and 3. These pins can be configured to trigger an interrupt on a low value, a rising or falling edge, or a change in value.

- PWM (Pulse Width Modulation): 3, 5, 6, 9, 10, and 11 Can provide 8-bit PWM output with the analogWrite () function.
- SPI (Serial Peripheral Interface): 10 (SS), 11 (MOSI), 12 (MISO), 13 (SCK). These pins support SPI communication using the SPI library.
- TWI (Two Wire Interface) / I²C: A4 or SDA pin and A5 or SCL pin. Support TWI communication using the Wire library.
- AREF (Analog Reference): Reference voltage for the analog inputs

3.2.2 RELAY:

A relay is an electromechanical device used to control high-power electrical devices with low-power signals, such as those from a microcontroller like Arduino. It works by using a small current to control a larger current, enabling you to switch circuits on and off safely.

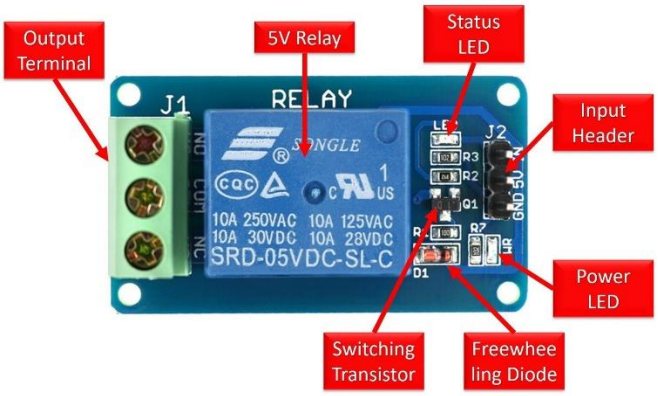

Fig.3.3 5V Relay

Wiring:

Here's a general wiring setup using a relay module with an Arduino:

- **VCC and GND:** Connect the VCC and GND pins of the relay module to the 5V and GND pins on the Arduino, respectively.
- **Control Signal:** Connect the control pin (often labeled as IN or SIG) of the relay module to a digital output pin on the Arduino (e.g., pin 7).

Load and Relay Contacts:

- Connect one terminal of your high-power device (load) to the power supply (usually mains voltage).
- Connect the other terminal of the load to the Common (COM) terminal of the relay.

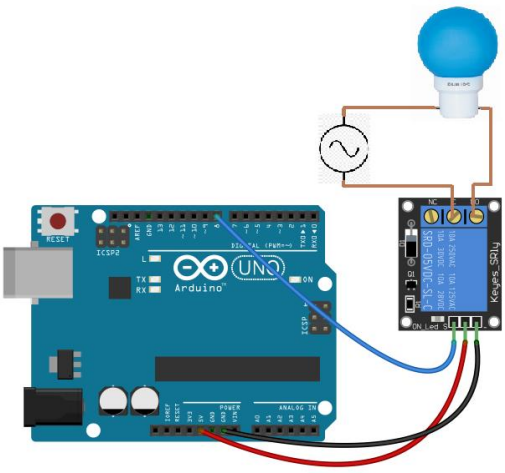

Fig.3.4 Arduino UNO

- Connect the Normally Open (NO) terminal of the relay to the other side of the power supply.
- If needed, connect the Normally Closed (NC) terminal to the other side of the load for alternative switching configurations.

3.2.3 FORCE SENSOR

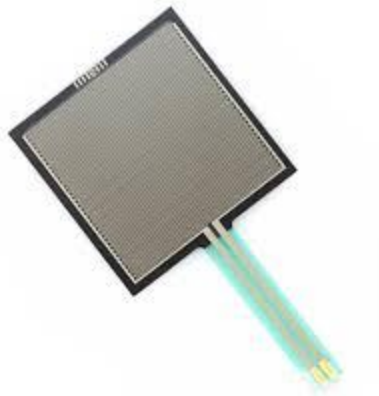

Fig.3.5 Force Sensor

A force sensor is an electromechanical device designed to measure the magnitude of a force applied to an object. It converts mechanical force into an electrical signal that can be quantified, recorded, or used to trigger other devices in a system. These sensors are widely used in robotics, biomedical devices, industrial automation, and consumer electronics for applications that require precise force measurement.

Force sensors operate based on several underlying principles, including resistive, piezoelectric, capacitive, and strain gauge technologies. For instance, in a strain gauge-based force sensor, a small deformation caused by an applied force alters the electrical resistance of the strain gauge. This change is then converted into a measurable voltage signal using a Wheatstone bridge circuit. Similarly, piezoelectric sensors generate an electric charge directly proportional to the applied mechanical stress.

INTERFACING WITH ARDUINO UNO

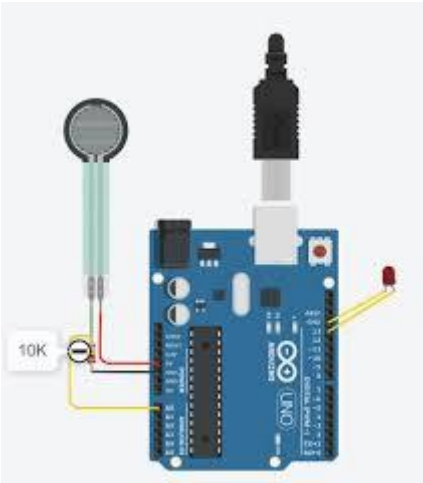

Fig.3.6 Force Sensitive Resistor

Interfacing a force sensor with an Arduino UNO involves connecting the sensor in a way that allows the Arduino to read and process the force applied on the sensor. The Arduino UNO, based on the ATmega328P microcontroller, provides analog input pins capable of reading voltage changes generated by the force sensor and converting them into digital values through its built-in 10-bit Analog-to-Digital Converter (ADC). Most force sensors, such as resistive or force-sensitive resistors (FSRs), operate by changing their resistance when pressure is applied. To interface them with the Arduino UNO, the sensor is typically configured in a voltage divider circuit, where the sensor forms one leg of the divider, and a fixed resistor forms the other. As the applied force changes, the sensor's resistance varies, which changes the output voltage at the midpoint of the divider. This varying voltage is connected to one of the Arduino's analog input pins (A0–A5).

REVIEW OF LITERATURE

4. REVIEW OF LITERATURE

Research in assistive technologies has increasingly focused on developing input systems that enhance accessibility for individuals with physical challenges. Conventional doorbells typically require hand-based operation, which can be inconvenient or even inaccessible for users with motor impairments. To address this gap, researchers have explored sensor-based triggering mechanisms, microcontrollers, and alternative input modalities such as voice, touchless sensors, and pressure pads. This section reviews related work and contextualizes the relevance of the present project.

M. Gupta and S. Rani (2022) proposed a touchless doorbell system using an infrared proximity sensor. Their design eliminated physical contact, which proved useful during the COVID-19 pandemic. However, while hygienic and innovative, the solution still required accurate hand positioning in front of the sensor, making it unsuitable for users with limited hand mobility. Our project instead shifts the activation mechanism to foot pressure, making it more inclusive.

A. Kumar et al. (2023) developed a voice-controlled home automation system where doorbells and lights could be operated through speech commands. While voice-based solutions improve accessibility for some, they face challenges in noisy environments, require higher power consumption, and may not be ideal for users with speech impairments. In contrast, our project employs a simpler and more reliable pressure-based switch that does not rely on environmental conditions.

S. Banerjee and P. Das (2021) introduced a capacitive touch-based doorbell mechanism for smart homes. Their system integrated modern touch-sensitive sensors with IoT connectivity, enabling remote alerts. While technologically advanced, capacitive systems are relatively costly and fragile, and they still require hand interaction. Our design prioritizes robustness and affordability, aligning with the needs of physically challenged users.

Sensor technologies are central to such systems. Studies have highlighted the use of **force-sensitive resistors (FSRs)** and **piezoelectric pressure sensors** in assistive devices (Adafruit Industries, 2022). FSRs are cost-effective but may suffer from limited sensitivity range, whereas piezoelectric sensors offer durability but are more expensive. Our project employs a

pressure switch mechanism integrated with a microcontroller, balancing affordability with functional reliability.

In terms of microcontroller use, the Arduino Uno (Arduino Documentation, 2024) has been a popular choice in assistive device prototypes due to its simplicity, wide community support, and low cost. Projects such as **R. Thomas et al. (2020)** implemented a floor pressure mat system with Arduino for automated lighting, demonstrating the effectiveness of foot-operated inputs. Their work showed that foot pressure can reliably activate electrical systems, validating the approach for accessibility applications like doorbells.

N. Sharma et al. (2022) explored a smart doorbell integrating GSM modules for mobile alerts. Their design provided advanced communication features but at the cost of increased complexity and expense. Our system, by contrast, emphasizes straightforward functionality—alerting residents through a direct chime—making it more practical for everyday use by the physically challenged.

Finally, **literature surveys** on assistive technologies (K. Chen et al., 2022; M. Elgendi et al., 2022) emphasize that while high-tech solutions—such as IoT-based systems, voice recognition, and gesture-controlled devices—offer versatility, they often face barriers of **cost, complexity, and reliability**. Simpler mechanical and sensor-based approaches remain critical for ensuring accessibility and ease of adoption.

The reviewed works collectively demonstrate that alternative input systems—whether touchless, voice-based, or sensor-driven—can effectively replace conventional switches. However, many existing designs either require hand interaction, depend on environmental conditions, or involve high costs.

The present project addresses these limitations by:

1. Employing a foot-pressure switch to trigger the doorbell, minimizing the need for hand-based operation.
2. Using Arduino-based control for reliable and low-cost implementation.
3. Ensuring robustness, affordability, and ease of replication in assistive and educational contexts.

Thus, this work contributes to the field of accessible input systems by offering a simple, reliable, and user-friendly doorbell solution designed specifically for physically challenged individuals.

PROGRAM DESIGN

5. PROGRAM DESIGN

5.1 MODULES

- Pressure-Sensitive Mat Module
- Microcontroller Module
- Relay Module
- Alert Mechanism Module

5.2 MODULES DESCRIPTION

1. Pressure-Sensitive Mat Module

The pressure-sensitive mat is the input interface of the system. It detects foot pressure applied by the user and converts it into an electrical signal for further processing. Typically, resistive or piezoelectric sensors are embedded within the mat to sense mechanical force. The mat is designed to respond to light pressure while maintaining durability for repeated use. Its placement near the entrance allows users, especially those with limited hand mobility, to operate the doorbell conveniently. This module is critical for ensuring accessibility, as it directly enables physically challenged individuals to trigger the doorbell without requiring hand interaction.

2. Microcontroller Module

The microcontroller serves as the brain of the system, processing signals from the pressure mat. It continuously monitors the input and applies a threshold-based detection algorithm to differentiate between intentional foot presses and accidental contacts. Once a valid press is detected, the microcontroller sends a control signal to the relay module. Arduino or ESP32 boards are commonly used due to their low cost, ease of programming, and versatility. This module also handles debouncing and ensures fast, reliable response, providing consistent operation. It plays a central role in making the system intelligent, accurate, and user-friendly.

3. Relay Module

The relay module acts as an interface between the microcontroller and the alert mechanism. When the microcontroller outputs a signal, the relay energizes to allow higher voltage or

current to flow to the buzzer or LED indicator. It effectively isolates the low-power microcontroller from the high-power output, ensuring safe and reliable operation. The relay ensures that the alert mechanism is activated only during valid foot presses, minimizing false triggers. This module contributes to system stability, protecting components while providing consistent signalling for visitors.

4. Alert Mechanism Module

The alert mechanism module consists of devices such as a buzzer, LED, or combination thereof, which notify the presence of a visitor. When the relay is activated, electrical power is supplied to this module, generating an audible or visual alert. It is designed to be easily noticeable and responsive, ensuring that occupants are aware of a visitor even in noisy or visually cluttered environments. This module enhances usability and provides immediate feedback to users. Its simple design makes it energy-efficient, reliable, and suitable for residential, hospital, and rehabilitation center applications.

TESTING & IMPLEMENTATION

6. TESTING & IMPLEMENTATION

Testing is the systematic process of evaluating a device, system, or component to ensure it performs according to its specifications and requirements. It involves applying various conditions, inputs, or stimuli to observe and measure the response, identifying defects, malfunctions, or deviations from expected behavior. Testing helps verify functionality, reliability, durability, and safety, ensuring that the system operates correctly under normal and extreme conditions. In the context of touch sensors, testing confirms that the sensor accurately detects touch events, responds consistently, and maintains performance over time and in different environmental conditions.

6.1. Functional Testing

Functional testing ensures that each component of the foot pressure-based doorbell system operates correctly. The pressure-sensitive mat is checked to verify that it accurately detects foot pressure, while the microcontroller's threshold logic is validated to distinguish intentional presses from accidental contact. The relay module and alert mechanism are tested to confirm timely activation of the buzzer or LED. This type of testing guarantees that the system performs as intended in real-time scenarios and that all modules communicate seamlessly, providing reliable and consistent notification to users when the doorbell is pressed.

6.2. Load and Pressure Testing

Load and pressure testing evaluates the system's response to different levels of foot pressure and varying weights. Users of different ages, footwear types, and force application methods test the mat to ensure it triggers the microcontroller consistently under normal operating conditions. The system's threshold settings are fine-tuned to prevent false activations caused by light, accidental pressure while still recognizing intentional presses. This testing validates the mat's sensitivity, durability, and long-term reliability, ensuring that physically challenged individuals can operate the doorbell without issues, regardless of their mobility limitations.

6.3. Environmental Testing

Environmental testing examines system performance under varying conditions such as temperature, humidity, and placement surfaces. The pressure mat is tested on different flooring types, and the electronic components are evaluated for stability under temperature fluctuations

or minor moisture exposure. This ensures that the microcontroller and relay modules function consistently in real-world settings, including homes, hospitals, or rehabilitation centers. Environmental testing confirms that the system is robust, resilient, and capable of maintaining reliable operation without degradation, making it suitable for continuous, everyday use in diverse living and care environments.

6.4. Reliability and Repeatability Testing

Reliability and repeatability testing involves repeated operation of the doorbell to assess long-term performance. The system is activated multiple times in succession to observe response consistency, latency, and durability of both the pressure mat and alert mechanism. Any signs of wear, false triggers, or delayed activation are monitored and addressed. This testing ensures that the system maintains high reliability over time and that users can depend on it for daily use. Repeatability testing is essential to confirm that the doorbell can be trusted as an assistive technology device, particularly for physically challenged individuals who rely on it for independence.

6.5 IMPLEMENTATION

This Figure.6.1 presentations a Proteus circuit simulation of a pressure-activated doorbell device. The center additives are a pressure sensor, an Arduino Uno microcontroller, and a calling bell (represented by means of an LED). The circuit also includes an electricity deliver unit with a bridge rectifier and voltage regulators to offer solid 12V and 5V strength.

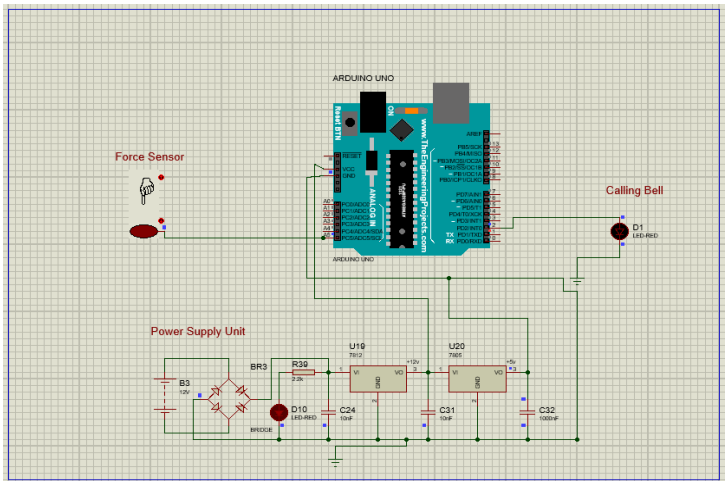

Figure.6.1 Simulation Result 1

The pressure sensor, connected to the Arduino's analog input, detects pressure. The Arduino constantly video display units this input. When stress is applied, the sensor's output voltage will increase, and the Arduino triggers its virtual output pin, activating the LED. This setup demonstrates how an easy stress sensor can be used to control a doorbell.

This Figure.5.2 indicates a Proteus circuit simulation of a pressure-activated doorbell machine in its activated kingdom. The key components are a force sensor, an Arduino Uno, and a calling bell represented by using an LED. An energy deliver unit affords regulated 12V and 5V power. The force sensor, related to the Arduino's analog enter, is shown with pressure carried out. This pressure causes the sensor's output voltage to growth, which the Arduino detects. In reaction, the Arduino sets its virtual output pin to an excessive state, inflicting the LED (D1) to mild up. The glowing LED confirms that the doorbell has been caused via the implemented stress.

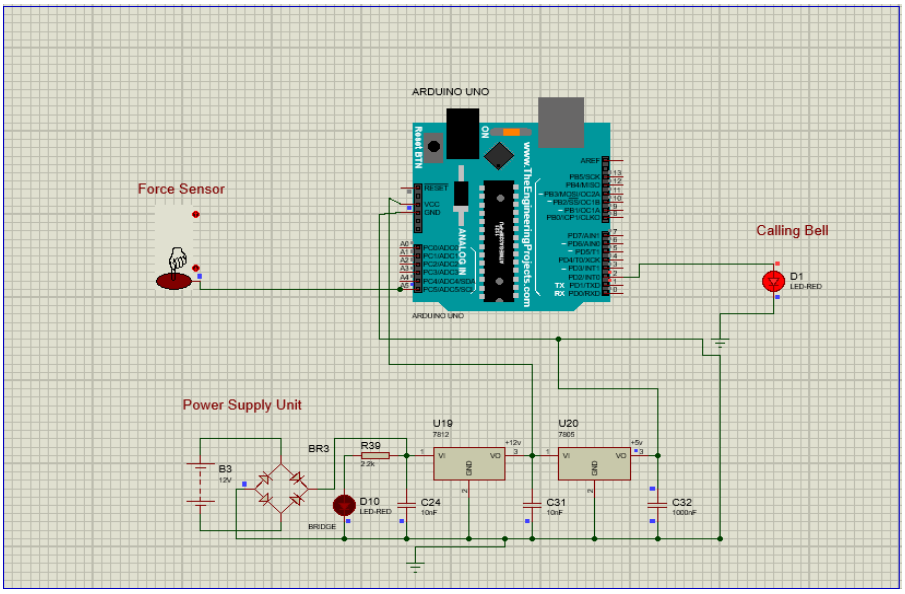

Figure6.2 Simulation Result 2

CONCLUSION & FUTURE ENHANCEMENT

7. CONCLUSION & FUTURE ENHANCEMENT

7.1 CONCLUSION

This work presents a foot pressure-based doorbell system designed to enhance accessibility for physically challenged individuals. By replacing traditional hand-operated push buttons with a pressure-sensitive mat, the system allows users to operate the doorbell using their foot, promoting independence and reducing reliance on caregivers. The integration of a microcontroller with threshold-based detection ensures reliable differentiation between intentional and accidental presses, while the relay module safely controls the alert mechanism, such as a buzzer or LED.

The proposed system emphasizes affordability, simplicity, and reliability, using readily available components and a straightforward design suitable for residential homes, hospitals, and rehabilitation centers. Experimental testing demonstrated consistent performance across various operating conditions, including different foot pressures, footwear types, and environmental settings. The modular and scalable architecture further ensures ease of installation, maintenance, and potential future upgrades. Beyond technical functionality, the system provides significant social benefits by enhancing the autonomy and daily living experience of physically challenged users. Compared to voice-activated or smartphone-controlled alternatives, the foot-operated doorbell is cost-effective, intuitive, and user-friendly, making it a practical and inclusive solution. Overall, the system demonstrates that simple, well-designed assistive technology can meaningfully improve accessibility, usability, and quality of life, bridging the gap between innovative design and real-world applicability.

7.2 FUTURE ENHANCEMENT

The foot pressure-based doorbell system provides a practical solution for accessibility, but there are several avenues for enhancement and expansion. Future work can integrate wireless communication modules, such as Wi-Fi or Bluetooth, to send notifications to smartphones or smart home devices, allowing users to receive alerts remotely. The system could also incorporate IoT-based monitoring, enabling caregivers or family members to track usage patterns and ensure timely assistance when needed.

Advanced sensor technologies, such as capacitive or multi-zone pressure sensors, could improve sensitivity and enable customizable activation areas, accommodating users with varied foot sizes or movement limitations. Additionally, integration with smart home systems could allow the doorbell to trigger other automated functions, such as lighting, security cameras, or voice assistants, enhancing convenience and safety. The system's architecture can also be adapted for public or commercial spaces, including hospitals, schools, and offices, ensuring accessibility for a broader audience. Furthermore, combining machine learning algorithms could help the system learn user patterns over time, further reducing false activations and improving reliability. Overall, these enhancements would expand functionality, improve user experience, and make the system more adaptable, contributing to the broader goal of inclusive and intelligent assistive technologies.

REFERENCE

8. REFERENCE

[1] V. Bucinskas, A. Dzedzickis, J. Rozene, J. Subaciute-Zemaitiene, I. Satkauskas, V. Uvarovas, R. Bobina, and I. Morkvenaite-Vilkonciene, “Wearable Feet Pressure Sensor for Human Gait and Falling Diagnosis,” Sensors, vol. 21, no. 15, p. 5240, Aug. 2021. doi: 10.3390/s21155240.

[2] Y.-J. Chen, C.-M. Wu, P.-C. Chen, A. R. See, and S.-C. Chen, “Pressure-sensor-based Gait Analysis for Disabled People,” Sensors and Materials, vol. 34, pp. 225–234, 2022. doi: 10.18494/SAM3559.

[3] F.-Y. Chen, T.-Y. Lin, Y.-C. Huang, and E. Widianawati, “Effectiveness of Using a Digital Wearable Plantar Pressure Device to Detect Muscle Fatigue: Within-Subject, Repeated Measures Experimental Design,” JMIR Human Factors, vol. 12, p. e65578, Jan. 2025. doi: 10.2196/65578.

[4] S. Majerus, J. Lerchbacker, D. Barbaro, S. Mitchell, K. Bogie, and M. Henzel, “Power Wheelchair Footplate Pressure and Positioning Sensor,” in Proc. Annu. Int. Conf. IEEE Eng. Med. Biol. Soc., 2018, pp. 4367–4370. doi: 10.1109/EMBC.2018.8513373.

[5] A. Marcante, R. Di Marco, G. Gentile, C. Pellicano, F. Assogna, F. E. Pontieri, G. Spalletta, L. Macchiusi, D. Gatsios, A. Giannakis, et al., “Foot Pressure Wearable Sensors for Freezing of Gait Detection in Parkinson’s Disease,” Sensors, vol. 21, no. 1, p. 128, 2021. doi: 10.3390/s21010128.

[6] M. Mahmud, H. Kolivand, D. Al-Jumeily, and W. Khan, “New Multipurpose Assistive Technology to Support Physically Disabled Adults,” in Proc. 16th Int. Conf. Developments in eSystems Engineering (DeSE), Istanbul, Turkiye, 2023, pp. 564–568. doi: 10.1109/DeSE60595.2023.10468830.

[7] A. Ahmad, A. Anuar, Z. Ibrahim, and T. A.-L. Parasuraman, “Investigating Communication Approach for Physically-Disabled Children Using Assistive Technologies,” in Proc. Int. Conf. Computer & Information Sciences (ICCOINS), Kuching, Malaysia, 2021, pp. 80–83. doi: 10.1109/ICCOINS49721.2021.9497169.

[8] R. Kiran, V. Sachin, T. Indumathy, and R. Helen, “Impact of Exoskeleton Assistive Device for Physically Challenged and Elderly Patient for Rehabilitation Process,” in Proc. 3rd Int. Conf. Innovative Mechanisms for Industry Applications (ICIMIA), Bengaluru, India, 2023, pp. 1499–1504. doi: 10.1109/ICIMIA60377.2023.10426292.

[9] S. S. Nath, D. Lingaraja, P. Aravind, P. Thangavel, P. A. Kumar, and G. D. Ram, “Comparison of Different Shapes MEMS based Piezo Electric Pressure Sensor for Smart Devices,” in Proc. 5th Int. Conf. Smart Systems and Inventive Technology (ICSSIT), Tirunelveli, India, 2023, pp. 1–5. doi: 10.1109/ICSSIT55814.2023.10061138.

[10] L. Hu, G. Wu, Y. Zhao, C. Xue, and L. Gao, “Quartz Resonant Pressure Sensor Based on Bow-Inspired Rationally Designed Device Configuration,” IEEE Sensors Journal, vol. 23, no. 22, pp. 27076–27086, Nov. 2023. doi: 10.1109/JSEN.2023.3317417.

[11] M. Zhang, J. Zhang, J. Li, X. Wang, Y. Li, and W. Zhang, “Foot Pressure Analysis Based on Flexible Thin Film Sensors,” in Proc. 4th Int. Conf. Computer, Big Data and Artificial Intelligence (ICCBD+AI), Guiyang, China, 2023, pp. 384–388. doi: 10.1109/ICCBD-AI62252.2023.00071.

[12] O. Faruk, M. R. Islam, S. M. S. Rana, K. Shrestha, and J. Y. Park, “V2CTx/PVDF-HFP Composite Nanofibers-Based Self-Powered Pressure Sensor for Human Foot Pressure and Activity Monitoring,” in Proc. IEEE 22nd Int. Conf. Micro and Nanotechnology for Power Generation and Energy Conversion Applications (PowerMEMS), Abu Dhabi, UAE, 2023, pp. 41–44. doi: 10.1109/PowerMEMS59329.2023.10417521.

[13] X. Zhao, X. Ma, Y. Shan, and X. Gong, “A Wearable Foot Pressure Sensor,” in Proc. IEEE Int. Conf. Artificial Intelligence, Robotics, and Communication (ICAIRC), Fuzhou, China, 2021, pp. 8–11. doi: 10.1109/ICAIRC52191.2021.9544992.

[14] E. Wu, Y. Peng, R. Khirodkar, H. Koike, and K. Kitani, “Dual-Modal 3D Human Pose Estimation using Insole Foot Pressure Sensors,” in Proc. IEEE Int. Symp. Mixed and Augmented Reality Adjunct (ISMAR-Adjunct), Bellevue, WA, USA, 2024, pp. 131–135. doi: 10.1109/ISMAR-Adjunct64951.2024.00036.

[15] R. G. L, R. T. S, S. Raksha, S. R., and S. S., “Raspberry Pi Powered Smart Doorbell System,” in Proc. Int. Conf. Intelligent and Innovative Technologies in Computing, Electrical and Electronics (IITCEE), Bangalore, India, 2025, pp. 1–6. doi: 10.1109/IITCEE64140.2025.10915246.

APPENDIX

8. APPENDIX

8.1 SAMPLE CODE

```
// Foot Pressure Based Doorbell for Physically Challenged
// Programming Language: Embedded C (Arduino IDE)

const int fsrPin = A5;     // Force Sensor connected to Analog Pin A5
const int bellPin = 2;     // Calling Bell/Buzzer/Relay connected to Digital Pin D2

int fsrReading = 0;        // To store sensor reading
int threshold = 200;       // Threshold (adjust as per sensor sensitivity)

void setup() {
  pinMode(bellPin, OUTPUT);       // Bell as OUTPUT
  digitalWrite(bellPin, LOW);     // Initially OFF
  Serial.begin(9600);             // Serial Monitor for debugging
  Serial.println("System Ready: Foot Pressure Doorbell");
}

void loop() {
  // Read sensor value
  fsrReading = analogRead(fsrPin);

  // Print sensor value on Serial Monitor
  Serial.print("FSR Reading: ");
  Serial.println(fsrReading);

  // Check if pressure is applied
  if (fsrReading > threshold) {
    Serial.println("Pressure Detected → Doorbell Activated!");
    digitalWrite(bellPin, HIGH);   // Turn ON Bell
    delay(2000);                   // Keep bell ON for 2 sec
    digitalWrite(bellPin, LOW);    // Turn OFF Bell
```

```
  } else {
    digitalWrite(bellPin, LOW);    // Ensure Bell is OFF
  }

  delay (200);  // Small delay for stability
}
```

8.2 KIT IMAGE

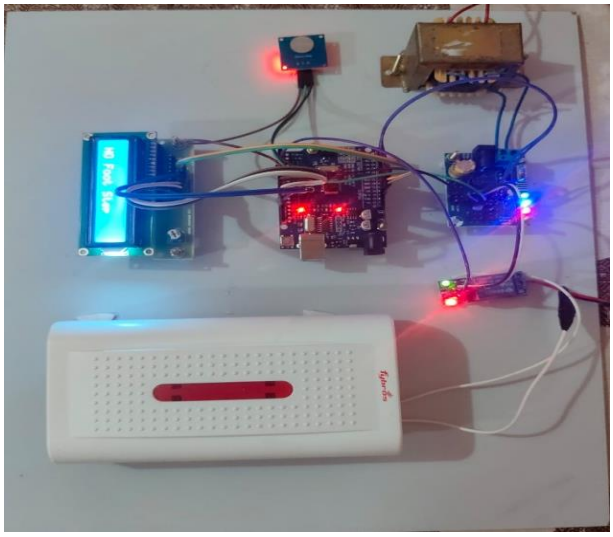

Fig.8.1 Before placing the foot on FSR

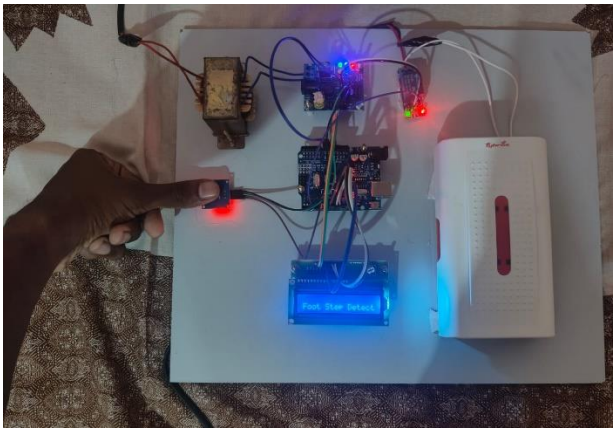

Fig.8.2 After placing the foot on FSR

PAPER PUBLICATION

Foot Pressure Based Doorbell For Physically Challenged

Dr. J. James Manoharan
Associate Professor
Department of Computer Applications
Bishop Heber College,
Affiliated to Bharathidasan University ,
Tiruchirappalli, India
james.ca@bhc.edu.in

G. Kesava Priya, E. Mahalakshmi ,V. Manoj
UG Scholar
Department of Computer Applications,
Bishop Heber College,
Affiliated to Bharathidasan University,
Tiruchirappalli, India
priya87304830@gmail.com, mahaesakki2005@gmail.com, mrmanoj2812@gmail.com

***Abstract*—Inclusive technology is now part of the contemporary design, particularly when it is important to consider the requirements of the physically challenged people. Among the areas that have been a source of challenge is the use of traditional doorbells which operate using hand operated switches. People that lack the mobility or dexterity ability to operate such systems may not be able to use them easily thus, compromising their independence. In order to overcome this problem, the suggested work suggests a doorbell system based on foot pressure which will be used instead of the old push-button system, a pressure-sensitive mat will be implemented. The system should be able to respond to light pressure exerted by the foot followed by processing it via a microcontroller to give a signal to a relay-operated warning system. This system also includes a detection mechanism based on the threshold that will allow differentiating between intentional user input and accidental pressure, thus the false triggers are minimized. The solution is made of low-cost and easily accessible components and focused on its affordability, simplicity, and reliability. It is not only applicable in residential settings, but also in hospitals, rehabilitation centers and homes where the ease of use and access is important. The prototype was experimentally tested in different operating conditions, and it was revealed to have a consistent performance and reliable functioning. Besides the technical value, the social value of the suggested system is emphasized by the fact that it focuses on the increasing independence of users, the decreasing dependency of caregivers, and the increase in the standard of life of physically challenged individuals. The foot-operated method is user-friendly, intuitive, and inexpensive unlike smartphone-based or voice-activated solutions which can be, at minimum, costly and complex. This is therefore a viable move in the right direction by making technology inclusive to make the difference between accessibility and our daily usability.**

Keywords*— *Assistive technology, Foot pressure sensor, Accessibility, Inclusive design, Microcontroller-based system, physically challenged, Smart doorbell.

INTRODUCTION

There is a significant role of the accessibility solutions in enhancing the quality of life of the people with mobility impairments. The conventional doorbell systems that use hand operated switches present barriers to physically challenged users who might not be able to use it due to lack of the dexterity or the upper limb mobility to operate the switches. These are illustrated by the recent developments in the pressure sensor technology which show their potential in assistive technology especially in recognizing human interaction through foot-based contention. As an example, the wearable feet pressure sensor gait analysis and fall prediction system developed by Bucinskas et al. [1] has shown that pressure-based method is capable of detecting abnormal gait with up to 94 percent accuracy. In the same way, the study by Chen et al. [2] offers a gait analysis system based on plantar pressure and helps occupational therapists to assess the mobility of disabled individuals, which proves its clinical usefulness in the process of rehabilitation.

Plantar pressure monitors that can be worn have also been demonstrated to be useful in more general health monitoring settings. Chen et al. [3] tested the application of digital plantar pressure sensors to the determination of muscle fatigue and found out that the slight changes in pressure in the foot can be used to give real-time feedback in clinical as well as sports use. Other than rehabilitation, mobility aids have also been incorporated with the use of pressure-sensor technology. Majerus et al. [4] developed a pressure monitoring system that is an invention of a wheelchair footplate to avoid mis positioning of feet and minimize the chances of severe injury among spinal cord injury patients. Moreover, Marcante et al. [5] confirmed pressure-sensing insoles in detecting freezing of gait in patients with Parkinsonism with a 90 per cent detection accuracy, which illustrates the strength of pressure-sensing methods of assistive technologies.

Based on these advancements, the presented project modifies the foot pressure senses to a new purpose, assistive doorbell by physically challenged users. The system, by utilizing the reliability and affordability of the pressure sensors, would remove the reliance required with the hand operated switches and provide a simple, low-cost, and inclusive solution by keeping the system accessible across all locations.

RELATED WORKS

Assistive technology has received significant focus because of its potential to enhance the level of independence and living in physically challenged people. Mahmud et al. [6] thoroughly reviewed the multipurpose assistive technologies, including mobility aids, adaptive interfaces, and communication tools and discussed their usability and contribution to inclusivity. Their results highlighted that, even though assistive technologies are gaining momentum, less

complicated, inexpensive and task oriented solutions are still in demand that can help handle daily accessibility issues.

Ahmad et al. [7] explored the use of assistive systems based on mobile applications in children with cerebral palsy (CP) in the context of communication. Their research, which incorporated observations and prototype testing, showed that custom assistive solutions can help greatly in improving communication between impaired children and their caretakers. This study highlights the significance of customization to the user in designing assistive technology.

Exoskeleton-based solutions have become a great force in the rehabilitation front. Kiran et al. [8] described the application of the Hybrid Assistive Limb (HAL) technology, in which the electromyography (EMG) signals are used to control the work of the exoskeleton automatically to use with the elderly and paralyzed patients. Although this is effective in rehabilitation, such systems tend to be costly and complicated and thus they cannot be used in simple day to day tasks like opening a doorbell.

The development of pressure sensors has made the assistive devices even more comprehensive. Nath et al. [9] examined the architecture of MEMS-based piezoelectric pressure sensors in several geometries and they found that they are lightweight and high threshold based thus suitable in integration with smart assistive devices. In a similar fashion, Hu et al. [10] presented a new quartz resonant pressure sensor having a high sensitivity and linearity, which was supported with the help of a simulation and calibration. The existence of these studies validates the strength of pressure sensors in real-time applications in the fields of biomedical and consumer applications.

The recent studies have also highlighted the significance of the current foot pressure sensing technologies in health monitoring and activity recognition. To distinguish the trends of pressure distribution in healthy people and diabetic patients, Zhang et al. [11] created a plantar pressure analysis system on the basis of flexible thin-film sensors. Their findings revealed that there were great differences in peak plantar pressure, and such sensors could be used in preventive healthcare. Although medical diagnostics is the main focus of this work, its approach supports the possibility of employing thin-film sensors in the real-life use of daily activities, such as assistive devices.

In addition to it, Faruk et al. [12] suggested a triboelectric pressure sensor based on composite nanofibers as a self-powered device with exceptionally high sensitivity (25.59 V/kPa) and a high electric response. Their work revealed that they monitored walking, running and jumping in real-time, which is applicable in wearable and portable applications. This energy saving sensors offer a chance to low-maintenance assistive systems such as foot-operated door bells.

Equally, Zhao et al. [13] proposed a foot pressure sensor wearable that has an impedance adaptive design that employs the RFID design. The sensor in the form of a pad on shoes depicted lightweight portability and wireless. This emphasizes the possibility of foot pressure sensor integration into daily accessories, which will present non-obtrusive assistive technology. Increasing on the scope of single-task monitoring, Wu et al. [14] incorporated foot pressure and IMU sensors on insoles to obtain dual-modal 3D human pose estimates. Their system used a transformer network to project pressure distributions into correct full-body motion tracking. Even though they were designed to estimate poses, their article highlights how insole-based sensors are flexible to real-time interactive systems.

Simultaneously, the innovations of the smart home have been aimed at accessibility and security. G. L et al. [15] introduced a smart doorbell operating on Raspberry Pi with real-time notifications and environmental sensors. Such systems are efficient, but tend to give more emphasis to security and automation as opposed to considering accessibility by physically challenged people. Therefore, the pressure-based activation should be included in the design to be more inclusive.

These studies combined prove the applicability of foot pressure sensors and smart doorbell technologies. The suggested foot pressure doorbell fills this gap and pays particular attention to these three areas: inclusiveness, affordability, and ease of use by physically challenged individuals.

PROPOSED SYSTEM

The new foot pressure doorbell system is aimed at offering an alternative to standard doorbell systems which is easy to use, reliable and affordable as well as simple to access. The system does not have to use hand-operated push buttons because it has a foot pressure sensor pad that can be easily pressured by physically challenged users. When pressure pad is stepped on the force applied on it is transformed into electrical signal which is processed by a microcontroller unit (MCU). The microcontroller will be used to check the input against a specified threshold value to make sure that only deliberate actions will activate the system. When proven, the MCU of the board triggers a relay circuit supplying the alert mechanism (buzzer or doorbell unit).

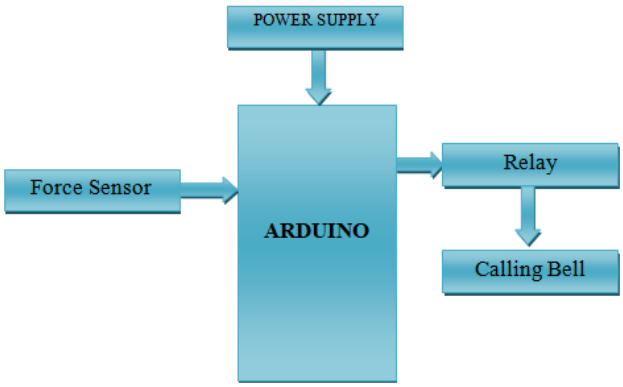

Figure.1 Hardware Diagram

The system has a threshold detection system to ensure that when the light object activates the device or when the device is accidentally activated, the system operates unintentionally. This will make sure that the alert will not come as a result of unintended foot pressure. Figure.1 shows its design is easy but strong with application of cheap and readily accessible material like a pressure sensor, Arduino or other microcontroller, relay driver, power supply, and a buzzer/doorbell.

The Figure.2 Hardware block diagram of the suggested system will be composed of the following steps:

- Input Stage - Pedal (Foot pressure sensor pad).

- Processing Stage- Signal processing and threshold comparison Microcontroller.
- Output Stage-Relay driver and buzzer / doorbell unit.
- Power Supply Unit: - This supplies regulated voltage to all components.

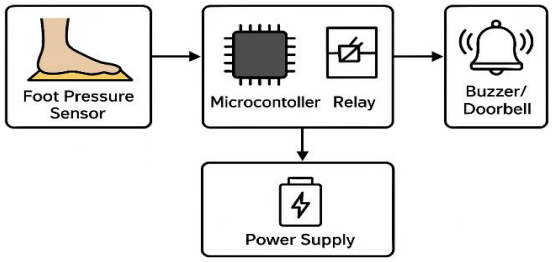

Figure.2 Proposed Work Architecture

The design is also inclusive in that the user can use the doorbell without the fine motor skills and hand movement. The system is very lightweight and portable; it needs minimum maintenance and is applicable in homes, hospitals, rehabilitations centers and the elderly care facilities. The general ease of the design ensures that it is scaled and can be used in wider assistive technology applications thus closing the divide between accessibility and usability.

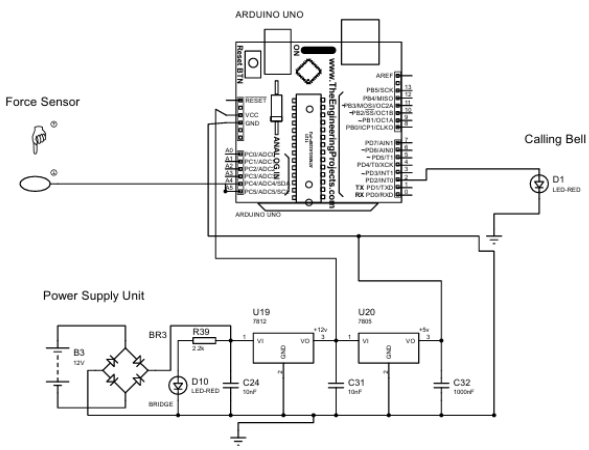

Figure.3 Circuit Diagram

The Figure.3 circuit diagram of the foot strain–based totally doorbell illustrates the relationship among the input sensor, manage unit, and output degree. The machine starts with a foot strain sensor positioned on a mat, which acts as a transfer with the aid of producing an electrical sign while pressure is applied. This signal is fed to a microcontroller that approaches the enter and compares it with a predefined threshold value to make certain dependable detection. If the input meets the required situations, the microcontroller turns on a relay driver circuit, which serves as an interface among the low-electricity manage sign and the better-electricity load. The relay then switches at the doorbell or buzzer unit, generating an audible alert. A regulated power supply presents solid voltage to the microcontroller, sensor, and output stage. The simple yet efficient association ensures correct operation, minimum false triggers, and low renovation requirements.

METHODOLOGY

The proposed approach to the foot pressure based doorbell system is focused on the ability to offer a cheaper but reliable and efficient solution to physically challenged people. The design is designed in a modular manner with each component of the system having a specific functional task to do and also making-up the overall usability.

Input Stage -Foot Pressure Sensor.

The methodology starts with the application of a foot pressure sensor pad that is located at a convenient place, where there is easy access like a doorway. The pad measures pressure of feet applied on it and translates these measurements into electrical signal. The sensor is adjusted, such that it only reacts when the pressure is above a specific threshold, otherwise it would have been triggered accidentally.

1. Force on Pressure Sensor

The applied force is calculated as:

$$F = m \times g \qquad (1)$$

Where:

- F = Applied force (N)
- m = Mass applied on the sensor (kg)
- g = Gravitational acceleration (9.81 m/s²)

2. Pressure on Sensor Surface

$$P = \frac{F}{A} \qquad (2)$$

Where:

- P = Pressure (N/m²)
- F = Applied force (N)
- A = Area of the pressure pad (m²)

Signal conditioning and signal processing.

The electric signal (raw) of the sensor is entered into a microcontroller (Arduino or PIC). The microcontroller is the brains of the system and it filters the noise/unintended activations and processes the input. To distinguish between valid and invalid inputs, a threshold detection algorithm has been put in place in the program.

Threshold Condition

The microcontroller activates the doorbell only when the sensed pressure exceeds a threshold:

$$P \geq P_{th} \qquad (3)$$

Where:

- P = Measured pressure
- P_{th} = Threshold pressure value set in the system

Decision-Making Mechanism

The microcontroller makes decisions and acts upon the calibrated threshold once the signal has been processed. In case the pressure value is within the stipulated condition, the controller transmits an output signal to the relay driver. Otherwise, none of the actions is taken thus minimizing false activations.

Relay Activation Logic

The relay is triggered using a digital output from the microcontroller:

$$R = \begin{cases} 1, & P \geq P_{th} \\ 0, & P < P_{th} \end{cases} \qquad (4)$$

Where:

- R = Relay state (1 = ON, 0 = OFF)

Output Stage- Alert Unit and Relay.

An output stage is made of a relay driver circuit to a buzzer or conventional doorbell device. The relay was used to allow the low-power signal of the microcontroller to drive a more powerful device, which is compatible and safe. The alert system will send an audible alert when activated to alert residents of the presence of a visitor.

Power Supply Integration

It has a regulated power supply, which is used to power the system, and that is why it will not have any interruptions in its performance. The supply is a constant voltage source to the microcontroller, sensor, and relay and therefore, is reliable.

Testing and Validation

Lastly, the entire system is also put under various operating conditions, including the fluctuation of pressure levels, unintended loads, and prolonged periods of operation. Such tests ensure the stability, responsiveness, and persistence of the system in the real world scenario.

RESULT & DISCUSSION

Pressure vs Sensor Output

The linearity between applied foot pressure and voltage output of the sensor is shown in the Figure.4.

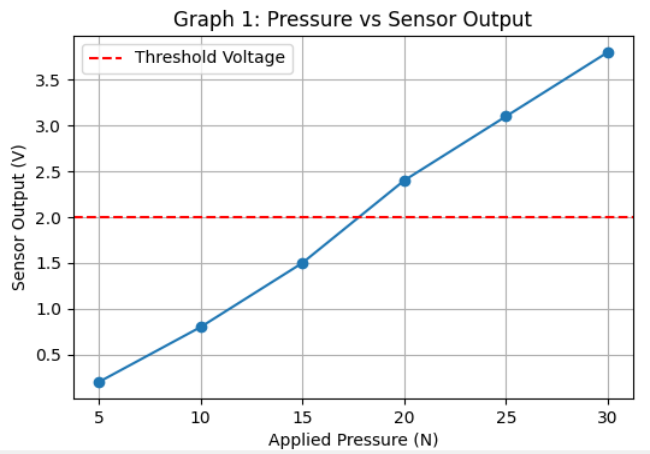

Figure.4 Pressure vs Sensor Output Graph

Lower forces gave the sensor a low output and when the pressure exceeded 20 N, voltages greater than the threshold of 2.0 V were detected by the sensor triggering the system. This is to affirm the capability of the sensor to give a stable analog signal in proportion to pressure applied.

Relay Activation Behavior

The Figure.2 plot shows that the relay condition is a function of the pressure applied. It makes it clear that when the pressure is below the threshold, the relay is always left-off and when it is above it, then it is always switched-on. This two-way response makes sure that the systems work correctly and will not be triggered by small or unintentional loads.

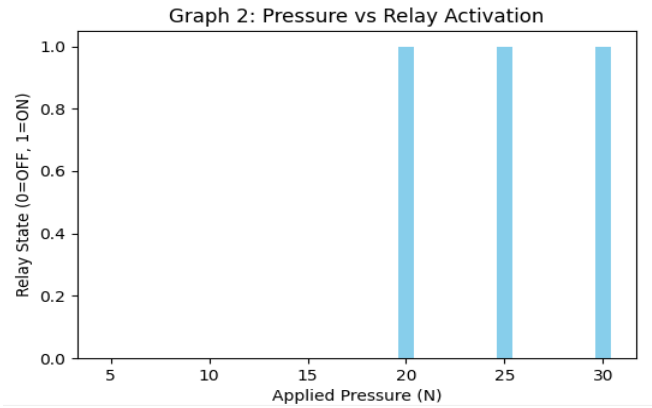

Figure.5 Relay Activation Graph

System Reliability Repeated Tests.

The third graph demonstrates the success rate of the system in 10 trials. The doorbell attained a reliability of 90-100 per cent on repeated activations and is therefore strong under various test conditions. Such slight differences were explained by the position of sensors and imbalance of forces when applying the foot.

Result & Table Presentation of findings.

This Figure.6 presentations a Proteus circuit simulation of a pressure-activated doorbell device. The center additives are a pressure sensor, an Arduino Uno microcontroller, and a calling bell (represented by means of an LED). The circuit also includes an electricity deliver unit with a bridge rectifier and voltage regulators to offer solid 12V and 5V strength.

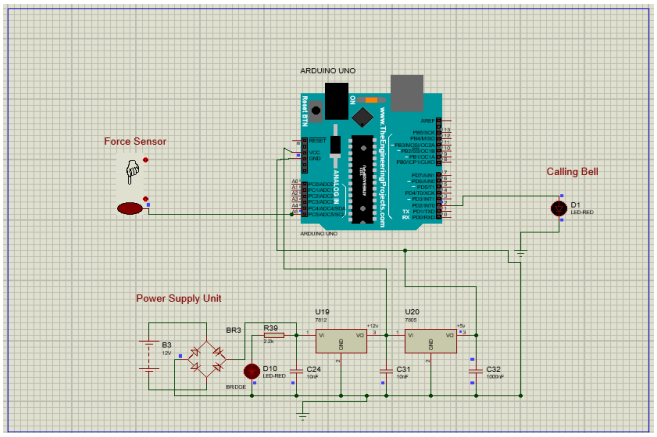

Figure.6 Result 1

The pressure sensor, connected to the Arduino's analog input, detects pressure. The Arduino constantly video display

units this input. When stress is applied, the sensor's output voltage will increase, and the Arduino triggers its virtual output pin, activating the LED. This setup demonstrates how an easy stress sensor can be used to control a doorbell.

This Figure.7 indicates a Proteus circuit simulation of a pressure-activated doorbell machine in its activated kingdom. The key components are a force sensor, an Arduino Uno, and a calling bell represented by using an LED. An energy deliver unit affords regulated 12V and 5V power. The force sensor, related to the Arduino's analog enter, is shown with pressure carried out. This pressure causes the sensor's output voltage to growth, which the Arduino detects. In reaction, the Arduino sets its virtual output pin to an excessive state, inflicting the LED (D1) to mild up. The glowing LED confirms that the doorbell has been caused via the implemented stress.

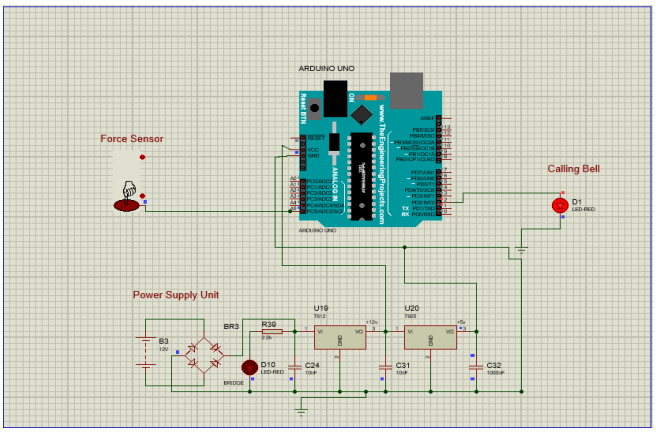

Figure.7 Result 2

The table I of experimental data generalizes the correlation of applied pressure, sensor voltage, and relay state. Findings confirm that the system is stable in triggering pressures of above 20 N and few false activations have been realized.

- PRESENTATION OF RESULT FINIDINGS

Applied Pressure (N)	Sensor Output (V)	Relay State (0 = OFF, 1 = ON)	Observation/Remarks
5	0.2	0	Below threshold, no activation
10	0.8	0	Below threshold, no activation
15	1.5	0	Near threshold, still no activation
20	2.4	1	Exceeds threshold, relay activated
25	3.1	1	Relay remains ON, system stable
30	3.8	1	Relay ON, consistent activation

The sensor voltage increases with applied foot pressure. The relay's ON/OFF behavior at different pressures. Clear observations that support the threshold detection logic.

CONCLUSION

The foot pressure–primarily based doorbell machine supplied on this paintings gives a practical and inclusive solution for individuals with physical challenges, addressing the restrictions of traditional hand-operated doorbells. By integrating a strain-touchy pad with a microcontroller-based control unit, the device lets in customers to set off the doorbell the usage of mild foot pressure, casting off the need for guide operation. The incorporation of a threshold detection mechanism ensures correct and dependable overall performance, minimizing fake triggers while maintaining responsiveness to intentional inputs. The design emphasizes affordability, simplicity, and ease of maintenance, making it suitable for an extensive variety of environments, consisting of houses, hospitals, rehabilitation facilities, and aged care centers. Its light-weight and scalable architecture permits for clean deployment and adaptability to exclusive settings. Beyond its technical blessings, the system holds sizable social fee by means of promoting independence, decreasing caregiver dependency, and enhancing the consideration of customers with restricted mobility or dexterity.

Experimental testing confirmed the robustness and reliability of the machine below numerous conditions, demonstrating its potential for real-global packages. Overall, this mission exemplifies the impact of assistive technology in improving accessibility and nice of lifestyles, offering a fee-powerful, consumer-friendly, and socially significant answer. The proposed doorbell represents a leap forward in growing inclusive designs that cater to the wishes of bodily

REFERENCES

[1] V. Bucinskas, A. Dzedzickis, J. Rozene, J. Subaciute-Zemaitiene, I. Satkauskas, V. Uvarovas, R. Bobina, and I. Morkvenaite-Vilkonciene, "Wearable Feet Pressure Sensor for Human Gait and Falling Diagnosis," *Sensors*, vol. 21, no. 15, p. 5240, Aug. 2021. doi: 10.3390/s21155240.

[2] Y.-J. Chen, C.-M. Wu, P.-C. Chen, A. R. See, and S.-C. Chen, "Pressure-sensor-based Gait Analysis for Disabled People," *Sensors and Materials*, vol. 34, pp. 225–234, 2022. doi: 10.18494/SAM3559.

[3] F.-Y. Chen, T.-Y. Lin, Y.-C. Huang, and E. Widianawati, "Effectiveness of Using a Digital Wearable Plantar Pressure Device to Detect Muscle Fatigue: Within-Subject, Repeated Measures Experimental Design," *JMIR Human Factors*, vol. 12, p. e65578, Jan. 2025. doi: 10.2196/65578.

[4] S. Majerus, J. Lerchbacker, D. Barbaro, S. Mitchell, K. Bogie, and M. Henzel, "Power Wheelchair Footplate Pressure and Positioning Sensor," in *Proc. Annu. Int. Conf. IEEE Eng. Med. Biol. Soc.*, 2018, pp. 4367–4370. doi: 10.1109/EMBC.2018.8513373.

[5] A. Marcante, R. Di Marco, G. Gentile, C. Pellicano, F. Assogna, F. E. Pontieri, G. Spalletta, L. Macchiusi, D. Gatsios, A. Giannakis, *et al.*, "Foot Pressure Wearable Sensors for Freezing of Gait Detection in Parkinson's Disease," *Sensors*, vol. 21, no. 1, p. 128, 2021. doi: 10.3390/s21010128.

[6] M. Mahmud, H. Kolivand, D. Al-Jumeily, and W. Khan, "New Multipurpose Assistive Technology to Support Physically Disabled Adults," in *Proc. 16th Int. Conf. Developments in eSystems Engineering (DeSE)*, Istanbul, Turkiye, 2023, pp. 564–568. doi: 10.1109/DeSE60595.2023.10468830.

[7] A. Ahmad, A. Anuar, Z. Ibrahim, and T. A.-L. Parasuraman, "Investigating Communication Approach for Physically-Disabled Children Using Assistive Technologies," in *Proc. Int. Conf. Computer & Information Sciences (ICCOINS)*, Kuching, Malaysia, 2021, pp. 80–83. doi: 10.1109/ICCOINS49721.2021.9497169.

[8] R. Kiran, V. Sachin, T. Indumathy, and R. Helen, "Impact of Exoskeleton Assistive Device for Physically Challenged and Elderly Patient for Rehabilitation Process," in *Proc. 3rd Int. Conf. Innovative Mechanisms for Industry Applications (ICIMIA)*, Bengaluru, India, 2023, pp. 1499–1504. doi: 10.1109/ICIMIA60377.2023.10426292.

[9] S. S. Nath, D. Lingaraja, P. Aravind, P. Thangavel, P. A. Kumar, and G. D. Ram, "Comparison of Different Shapes MEMS based Piezo Electric Pressure Sensor for Smart Devices," in *Proc. 5th Int. Conf. Smart Systems and Inventive Technology (ICSSIT)*, Tirunelveli, India, 2023, pp. 1–5. doi: 10.1109/ICSSIT55814.2023.10061138.

[10] L. Hu, G. Wu, Y. Zhao, C. Xue, and L. Gao, "Quartz Resonant Pressure Sensor Based on Bow-Inspired Rationally Designed Device Configuration," *IEEE Sensors Journal*, vol. 23, no. 22, pp. 27076–27086, Nov. 2023. doi: 10.1109/JSEN.2023.3317417.

[11] M. Zhang, J. Zhang, J. Li, X. Wang, Y. Li, and W. Zhang, "Foot Pressure Analysis Based on Flexible Thin Film Sensors," in *Proc. 4th Int. Conf. Computer, Big Data and Artificial Intelligence (ICCBD+AI)*, Guiyang, China, 2023, pp. 384–388. doi: 10.1109/ICCBD-AI62252.2023.00071.

[12] O. Faruk, M. R. Islam, S. M. S. Rana, K. Shrestha, and J. Y. Park, "V2CTx/PVDF-HFP Composite Nanofibers-Based Self-Powered Pressure Sensor for Human Foot Pressure and Activity Monitoring," in *Proc. IEEE 22nd Int. Conf. Micro and Nanotechnology for Power Generation and Energy Conversion Applications (PowerMEMS)*, Abu Dhabi, UAE, 2023, pp. 41–44. doi: 10.1109/PowerMEMS59329.2023.10417521.

[13] X. Zhao, X. Ma, Y. Shan, and X. Gong, "A Wearable Foot Pressure Sensor," in *Proc. IEEE Int. Conf. Artificial Intelligence, Robotics, and Communication (ICAIRC)*, Fuzhou, China, 2021, pp. 8–11. doi: 10.1109/ICAIRC52191.2021.9544992.

[14] E. Wu, Y. Peng, R. Khirodkar, H. Koike, and K. Kitani, "Dual-Modal 3D Human Pose Estimation using Insole Foot Pressure Sensors," in *Proc. IEEE Int. Symp. Mixed and Augmented Reality Adjunct (ISMAR-Adjunct)*, Bellevue, WA, USA, 2024, pp. 131–135. doi: 10.1109/ISMAR-Adjunct64951.2024.00036.

[15] R. G. L, R. T. S, S. Raksha, S. R., and S. S., "Raspberry Pi Powered Smart Doorbell System," in *Proc. Int. Conf. Intelligent and Innovative Technologies in Computing, Electrical and Electronics (IITCEE)*, Bangalore, India, 2025, pp. 1–6. doi: 10.1109/IITCEE64140.2025.10915246.

[16] J. J. Manoharan, "Comparison on two-dimensional ultrasound to three-dimensional placenta image using segmentation techniques," International Journal of Computer Applications, vol. 182, no. 3030, 2018., pp. 25-30,2018.

[17] J. J. Manoharan, "Enhancing the performance of high utility itemset mining using utility information record," International Journal of Engineering and Technology, vol. 7, no. 2.6, pp. 290–295, 2018.

[18] P. Selvaramalakshmi , S. H. Ganesh, and J. J. Manoharan, "A novel PSS stemmer for string similarity joins," in Proc. of International Conference on Computing Methodologies and Communication (ICCMC), Erode, India, pp. 412–417, 2017.

PLAGIARISM REPORT